DATASHEET

Low-Intensity SAL Series

ICAO Low-intensity Type A 10cd and Type B 32cd
FAA L-810

OBELUX AVIATION LIGHTS

Obelux Oy, Kutomotie 6 B, 00380 Helsinki FINLAND | The information in this document is subject to change without notice. © Obelux Oy 2014

WWW.OBELUX.COM

Optical characteristics

- 10cd fixed or flashing
- 32cd fixed or flashing
- Colour aviation RED
- Horizontal beam 360°
- Vertical beam 0°…+10°



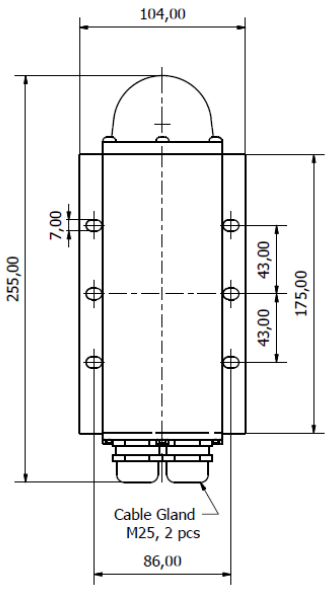

Low-Intensity 10cd and 32cd Stand-alone Series

LED Aviation Obstruction Lights

Obelux low-intensity stand-alone series is designed for marking tall structures such as wind turbines, chimneys, masts, and towers. The product offers unique features such as fault monitoring, photocell and switcher incorporated in the light.

Specifications met

ICAO International Standards and Recommended Practices:
Aerodromes Annex 14 Volume 1, 5th Edition, July 2009, Chapter 6:
Low-intensity Type A
Low-intensity Type B

FAA Advisory Circular
AC 150/5345-43G: L-810

Key Features

- Based on LED-technology
- 10cd and 32cd RED fixed and flashing light
- Incorporated photocell and fault monitoring
- Extremely low-power consumption
- More than 10 years of maintenance free operating time
- 5 year warranty- the longest in the industry
- 10 years warranty for the optics!

DATASHEET

Low-Intensity SAL Series

ICAO Low-intensity Type A 10cd and Type B 32cd
FAA L-810

OBELUX AVIATION LIGHTS

Obelux Oy, Kutomotie 6 B, 00380 Helsinki FINLAND | The information in this document is subject to change without notice. © Obelux Oy 2014

WWW.OBELUX.COM

Electrical Characteristics

- ACW- models, wide AC voltage range: Nominal 100...240V_{AC}, Nominal 50 ... 60Hz
- DCW- models, wide DC voltage range: Nominal 10...60V_{DC}
- Overvoltage protection
- Constant power input by active PFC
- Day/Night switch (400/800/1600lux)
- Flash rates: 20/40/60fpm
- Power consumption 4-7W

Mounting Set Options

- MS-HV80
- MS-EV60
- MS-EV100
- MS-EV150
- MS-DEV60
- MS-DEV100
- MS-RW
- MS-LVU
- MS-N1B

Mechanical Characteristics

- Anodized, marine grade aluminium body and end parts
- AISI 316 acid-proof stainless steel screws
- Glass cover, degree of protection IP65
- Operating temperature range -55...+55 °C
- Height 255 mm, diameter 104 mm
- Weight 1,3 kg (without mounting set)
- Terminal block for 1.5 ... 4 mm2 wires



Order code	ICAO / FAA	Output	Op. volt.	Power cons.	Fault monitoring	Built-in photocell	Packing dimensions
LI-10-DCW-A	Type A	10cd	10-60VDC	2,5 W	Yes	Yes	280x130x100, 1,5kg
LI-10-ACW-A	Type A	10cd	100-240VAC	7 VA	Yes	Yes	280x130x100, 1,5kg
LI-32-DCW-A	Type B / L-810	32cd	10-60VDC	3,7 W	Yes	Yes	280x130x100, 1,5kg
LI-32-ACW-A	Type B / L-810	32cd	100-240VAC	9 VA	Yes	Yes	280x130x100, 1,5kg
Mounting sets							
MS-HV80	Mounting set, basic model for 33 to 80 mm pipes						
MS-EV60	Mounting set with extension plate for 30 to 60 mm pipes						
MS-EV100	Mounting set with extension plate for 60 to 100 mm pipes						
MS-EV150	Mounting set with extension plate for 100 to 150 mm pipes						
MS-DEV60	Mounting set for double lights with extension plate for 30 to 60 mm pipes						
MS-DEV100	Mounting set for double lights with extension plate for 60 to 100 mm pipes						
MS-RW	Mounting set with extension plate for roof or wall mounting						
MS-LVU	Mounting set with extension plate for L, V, and U-profiles, galvanized						
MS-N1B	Mounting set with 1" NPT at bottom						

DATASHEET

Low-Intensity SAL Series

ICAO Low-intensity Type A 10cd and Type B 32cd
FAA L-810

OBELUX AVIATION LIGHTS

Obelux Oy, Kutomotie 6 B, 00380 Helsinki FINLAND | The information in this document is subject to change without notice. © Obelux Oy 2014

WWW.OBELUX.COM

Installation specifications

- Cable gland M25
- Cable diameter 11 to 17 mm (includes cable gland seal 6-13mm)
- Wire diameter max. 6 mm^2
- Recommended cable
- 3x1.5 mm^2 or 3x2.5 mm^2

Options

- C CGS-20 smaller cable glands set (includes 2pcs M20 cable glands with M25-M20 adapters for 7-13 mm cables)

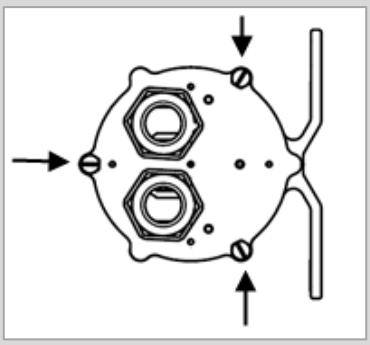

1. Bottom plate screws

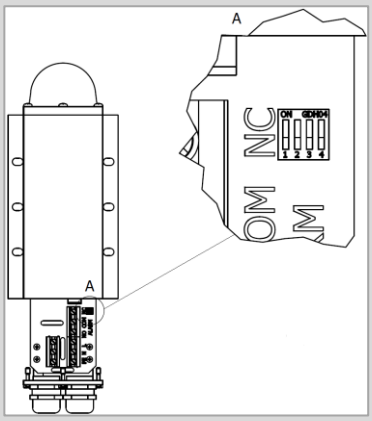

2. Location of DIP switches

Electrical installation instructions

Obelux LI SAL Series have two cable glands for easy chaining without external distribution boxes. Connection can be protected with a 6A or 10A fuse or with a circuit breaker (C curve: C6A or C10A).

Configuring Obelux LI SAL Series

Photocell mode (enabled/disabled) and threshold (400 lux, 800 lux or 1600 lux) can be selected by the user using DIP configuration switches. Open three screws on the bottom of Obelux light to gain access to DIP switches. We recommend using a socket wrench but the screws can also be opened with a suitable flat-head screwdriver. Holding the aviation obstacle light glass dome pointing upwards, the individual DIP switches are numbered 1-4 from left to right.

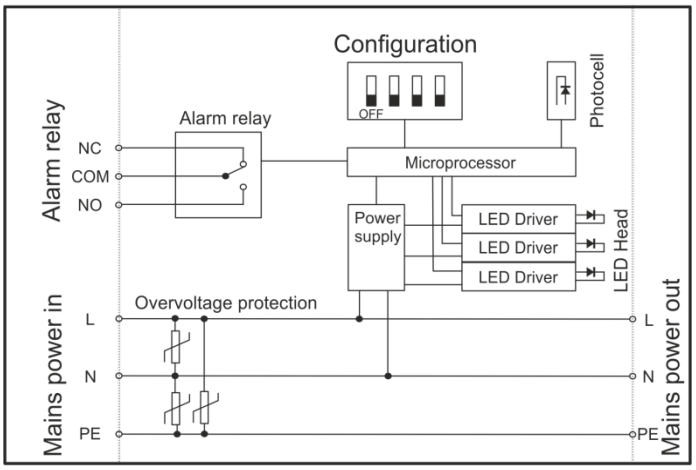

3. Block diagram of Obelux LI stand-alone light.

DIP Switch Settings–Photocell mode		
1	2	Operating mode
OFF	OFF	Photocell disabled
ON	OFF	400 lx
OFF	ON	800 lx
ON	ON	1600 lx

DIP Switch Settings–Flash mode		
3	4	Operating mode
OFF	OFF	Steady-burning i.e.fixed
ON	OFF	20 flashes per minute
OFF	ON	40 flashes per minute
ON	ON	60 flashes per minute

Factory default setting is all switches in OFF (steady-burning mode without photocell control). Turn-off time in 3 min, turn-on time is 10 sec. When the photocell operation is enabled, the obstruction light turns on when the ambient light level has dropped below selected level for ten seconds. Light turns off when the ambient light level has exceeded the selected value for more than three minutes

DATASHEET

Low-Intensity SAL Series

ICAO Low-intensity Type A 10cd and Type B 32cd
FAA L-810

OBELUX AVIATION LIGHTS

Obelux Oy, Kutomotie 6 B, 00380 Helsinki FINLAND | The information in this document is subject to change without notice. © Obelux Oy 2014

WWW.OBELUX.COM

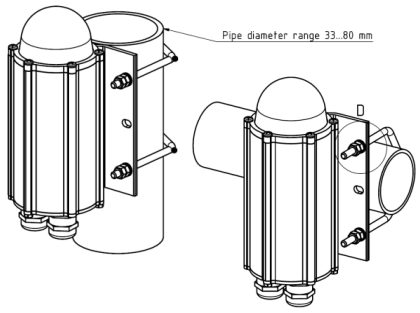

Obelux MS-HV80
Mounting set for 33-80 mm vertical or horizontal pipe.
This mounting set includes:
- 2 pcs M6 U-bolt
- 8 pcs M6 hex nut
- 4 pcs 6/12 mm washer

All parts are AISI316 acid-proof stainless steel.

More detailed mechanical data: see MS-HV80 datasheet

► **Order Code MS-HV80**

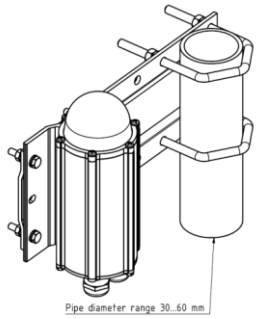

Obelux MS-EV60
Mounting set with extension plate for 30-60 mm vertical pipe installation.
This mounting set includes:
- 2 pcs M8 U-bolt, 8 pcs M8 hex nut
- 4 pcs M6x30 bolt, 8 pcs M6 hex nut, 4 pcs 6/12 washer
- 1 pcs extension plate

Extension plate marine grade anodized aluminium, other parts AISI316 acid-proof stainless steel.

More detailed mechanical data: see MS-EV60 datasheet

► **Order Code: MS-EV60**

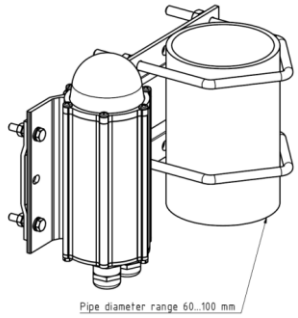

Obelux MS-EV100
Mounting set with extension plate for 60-100 mm vertical pipe installation.
This mounting set includes:
- **2 pcs M8 U-bolt, 8 pcs M8 hex nut**
- **4 pcs M6x30 bolt, 8 pcs M6 hex nut, 4 pcs 6/12 washer**
- **1 pcs extension plate**

Extension plate marine grade anodized aluminium, other parts AISI316 acid-proof stainless steel.

More detailed mechanical data: see MS-EV100 datasheet

► **Order Code: MS-EV100**

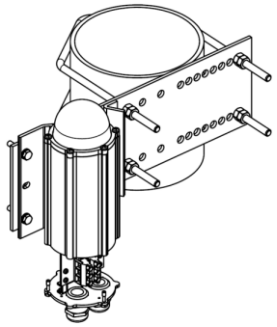

Obelux MS-EV150
Mounting set with extension plate for 100-150 mm vertical pipe installation.
This mounting set includes:
- **2 pcs M8 U-bolt, 8 pcs M8 hex nut**
- **4 pcs M6x30 bolt, 8 pcs M6 hex nut, 4 pcs 6/12 washer**
- **1 pcs extension plate**

Extension plate hot dipped galvanised steel, other parts AISI316 acid-proof stainless steel.

More detailed mechanical data: see MS-EV150 datasheet

► **Order Code: MS-EV150**

DATASHEET

Low-Intensity SAL Series

ICAO Low-intensity Type A 10cd and Type B 32cd
FAA L-810

OBELUX AVIATION LIGHTS

Obelux Oy, Kutomotie 6 B, 00380 Helsinki FINLAND | The information in this document is subject to change without notice. © Obelux Oy 2014

WWW.OBELUX.COM

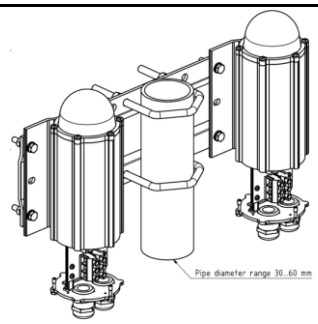

Obelux MS-DEV60
Double mounting set with extension plate for 30-60 mm vertical pipe installation. Mounting set include:

- 2 pcs M8 U-bolt, 8 pcs M8 hex nut
- 8 pcs M6x30 bolt, 16 pcs M6 hex nut, 8 pcs 6/12 washer
- 1 pcs extension plate

Extension plate marine grade anodised aluminium, other parts AISI316 acid-proof stainless steel.

More detailed mechanical data: see MS-DEV60 datasheet

► **Order Code: MS-DEV60**

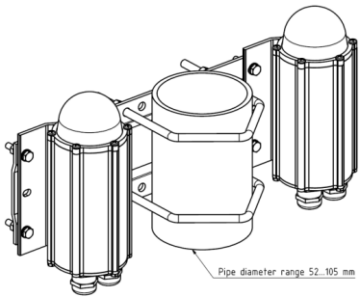

Obelux MS-DEV100
Double mounting set with extension plate for 60-100 mm vertical pipe installation. Mounting set include:

- 2 pcs M8 U-bolt, 8 pcs M8 hex nut
- 8 pcs M6x30 bolt, 16 pcs M6 hex nut, 8 pcs 6/12 washer
- 1 pcs extension plate

Extension plate marine grade anodised aluminium, other parts AISI316 acid-proof stainless steel.

More detailed mechanical data: see MS-DEV100 datasheet

► **Order Code: MS-DEV100**

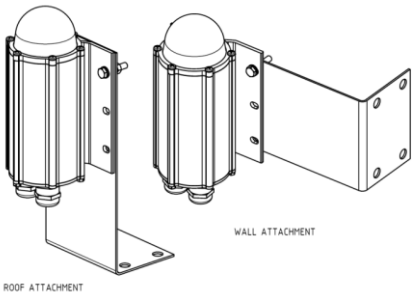

Obelux MS-RW
Mounting set for horizontal plate or wall installation.
Mounting set includes:

- 4 pcs M6x30 bolt, 8 pcs M6 hex nut, 4 pcs 6/12 washer
- 1 pcs L-shape 2 mm plate

All parts AISI 316 acid-proof stainless steel.

More detailed mechanical data: see MS-RW datasheet

► **Order Code: MS-RW**

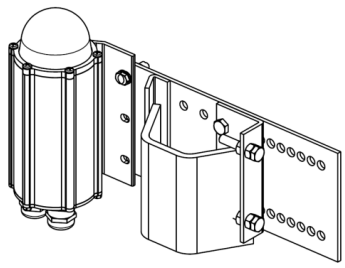

Obelux MS-LVU
Mounting set for L and V -shape profiles
Mounting set includes:

- 1 set accessories for light unit fitting to plate
- 1 pcs extension plate with adjusting plate and accessories

Extension plate hot dip galvanized steel, other parts AISI316 acid-proof stainless steel.

More detailed mechanical data: see MS-LVU datasheet

► **Order Code: MS-LVU** (with galvanized extension plate)
► **Order Code: MS-LVA** (with AISI316 extension plate)

DATASHEET

Low-Intensity SAL Series

ICAO Low-intensity Type A 10cd and Type B 32cd
FAA L-810

OBELUX AVIATION LIGHTS

Obelux Oy, Kutomotie 6 B, 00380 Helsinki FINLAND | The information in this document is subject to change without notice. © Obelux Oy 2014

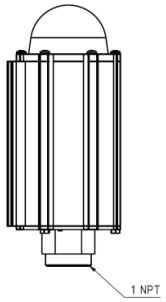

Obelux MS-N1B :
Mounting set for 1" NPT at bottom

More detailed mechanical dimensions: see MS-N1B datasheet.

► **Order Code: MS-N1B**

Created by	Date
Laakso	13-March-2019

We, OBELUX OY (address: Kutomotie 6 B, 00380 HELSINKI, FINLAND) declare under sole responsibility that the following OBELUX product

Equipment	Aviation Obstruction Light
Brand	Obelux
Model	LIR32-ACW-A

Comply to ICAO Low Intensity Aviation Obstruction Light, type B requirements.

Helsinki, 13-March-2019

OBELUX OY

Vesa Laakso
Managing Director

Obelux Oy
Kutomotie 6 B, 00380 HELSINKI, FINLAND
Phone +358 9 6871 6800 – Telefax +358 9 621 5518
VAT FI14668845 – http://www.obelux.com